Avtron HS25A Encoders

Light Mill Duty Optical Hollow Shaft Encoder

Magnetic Durability in a Compact Encoder

- Fits shafts 3/8" to 3/4"
- Simple Installation
- Unbreakable Optical Disk
- Up to 8192 PPR
- Wide-Gap Technology: Up to 8X larger gap between sensor and rotor
- Replaces Competitive Models without Rewiring
- Fits end of shaft applications
- IP65/Nema 4, 13 Rating: Dust and Liquid Tight
- Superior Bearings and Seals
- -20°C to +100°C Operation *
- 2 Year No-Hassle Warranty

HS25A

HS25A encoders fit shafts from 3/8" to 3/4" easily, using a durable shaft insert; units may be resized by replacing or removing the insert, enabling our factory, distributors, and customer stockrooms to swiftly meet any need. The shaft insert (3/8" to 5/8") [6 to 16mm] also provides isolation from motor shaft currents, while permitting case grounding to meet NEC requirements.

Avtron encoders have superior shaft seals and bearings that stay sealed to keep contaminants out, through temperature cycling and liquid sprays. Our encoder seals are protected by mechanical barriers to prevent flexing or failure, and Avtron's superior bearings feature synthetic lubricants for even longer life.

Many competitive optical encoder designs risk sensor damage from any vibration or shock: sensors ride less than four thousandths of an inch from the thin, often flexible, optical disk spinning at full motor speeds. Some designs even use thin glass disks in "industrial" products! Avtron uses only unbreakable disks and a sensor to disk gap over 8X larger than the competition.

Our optical HS25A encoders use superior sensor, disk, bearing, and seal technology to give top performance in industrial conditions. Select an Avtron HS25A today!

OUTLINE DRAWING

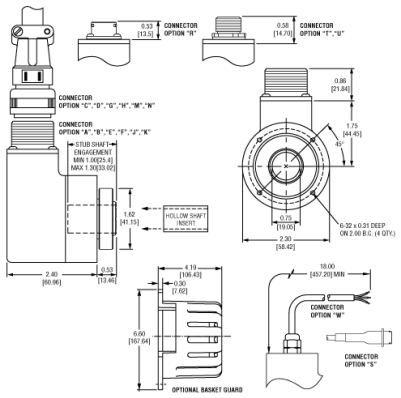

MORE HS25A ADVANTAGES

- All digital, fully integrated design
- No mechanical adjustments or trim potentiometers
- Innovative shaft ring retains collar during installation
- Advanced sensor technology
- Superior bearings with synthetic lubricant for longer life
- No extra charge for signal complements and marker pulse (A,A–, B,B–, Z,Z–)
- Insulated from motor shaft currents using shaft inserts
- Units can be resized by interchanging or removing shaft inserts
- Optional basket guard adds even more protection

MORE HS25A SPECIFICATIONS

Operating Power: Volts: 5 - 28 VDC; Current: 50mA, no load
Output Format: A Quad B with marker (A,/A, B,/B, Z,/Z)
Frequency Range: 0 to 125 kHz
PPR: 1 - 3600 standard (for other PPR needs up to 8192 consult factory)
Speed: 6000 RPM Max., (for higher speeds, consult factory)
Temperature: -20° to 100°C *
Environmental: IP65
Vibration: 5-2000Hz
Shock: 50G, 11mS duration
Weight: 0.95 lbs [431g]
Specifications and features are subject to change without notice.
* Please consult factory for temperature/speed derating

Check out our website for more detailed specifications, drawings, and installation instructions. www.avtronencoders.com

Nidec Industrial Solutions
243 Tuxedo Avenue - Cleveland, Ohio 44131
encoderhelpdesk@nidec-industrial.com
+1 216-642-1230 - www.avtronencoders.com

Features and specifications are subject to change without notice. EU-SMART™, SMARTSafe™, SMARTTach™, THIN-LINE™, WIDE-GAP™, SAFETach™, and BULLSEYE32™ are trademarks of Nidec Industrial Solution. All other trademarks and registered trademarks are the property of their respective owners. Nidec Industrial Solutions' standard warranty applies. All dimensions approximate.

SELECTION GUIDE

MODEL	PPR	LINE DRIVER	HOLLOW SHAFT BORE SIZE	CONNECTOR OPTIONS	MOUNTING	PROTECTION	ANTI-ROTATIONAL TETHER	CHANNELS	MODIFICATIONS
HS25A	A - 1 PPR C - 25 PPR F - 60 PPR G - 100 PPR H - 120 PPR K - 200 PPR P - 300 PPR E - 360 PPR Q - 500 PPR R - 512 PPR S - 600 PPR T - 625 PPR U - 720 PPR V - 900 PPR W - 1000 PPR Y - 1024 PPR Z - 1200 PPR 1 - 1250 PPR 3 - 2000 PPR 4 - 2048 PPR 5 - 2500 PPR 6 - 2540 PPR 7 - 3600 PPR	1 - 5-28v In/Out (7272) 2 - 5-28v In/OC Out (7273) 4 - 5-28v In, 5v Out (7272)	A - 3/8 in. bore via insert B - 1/2 in. bore via insert C - 5/8 in. bore via insert D - 3/4 in. native bore U - 3/8 in. thru 5/8 in bore (Universal USA) L - 6 mm via insert M - 8 mm via insert N - 10 mm via insert P - 12mm via insert Q - 14mm via insert S - 16mm via insert Z - 12mm thru 16mm bore (Universal metric) *No longer includes 14mm	A - 10 pin MS style w/o Plug, Avtron/BEI Pinout B - 10 pin MS style w/o Plug, Dynapar HS35 Pinout C - 10 pin MS style w/Plug, Avtron/BEI Pinout D - 10 pin MS style w/plug, Dynapar HS35 Pinout E - 6 pin MS style w/o Plug, Avtron/BEI Pinout F - 6 pin MS style w/o Plug, Dynapar HS35 Pinout G - 6 pin MS style w/plug, Avtron/BEI Pinout H - 6 pin MS style w/plug, Dynapar HS35 Pinout J - 7 pin MS style w/o Plug, Avtron/BEI Pinout K - 7 pin MS style w/o Plug, Dynapar HS35 Pinout M - 7 pin MS style w/plug, Avtron/BEI Pinout N - 7 pin MS style w/plug, Dynapar HS35 Pinout R - 10 pin Mini-MS style Twist-Lock (Baldor/Bayonet Style) w/o plug, Avtron/BEI Pinout S - 10 pin Mini-MS style Twist-Lock (Baldor/Bayonet Style) on cable w/o plug, Avtron/BEI Pinout T - M12 Turck Pinout U - M12 USA Pinout W - Cable (18 in. or special length)	E - End of Shaft (only)	0 - None 1 - Basket	X - No Tether A - 1/4 in.-20 T-Bolt Fan Cover Tether B - 5/16 in.-18 T-Bolt Fan Cover Tether C - 3/8 in.-16 T-Bolt Fan Cover Tether D - All T-bolt Fan Cover Tethers E - 4.5 in. C-Face Tether F - 8.5 in. C-Face Tether G - 12 in. Threaded Rod Tether U - A-F All Tethers	A - All Signals (A, /A, B, /B, Z, /Z) B - A, /A, B, /B (complements, no marker) D - A, /A (single phase with complement, no marker) E - A, B, Z (no complements, marker) F - A, B (no complements, no marker)	000 - No Special Features 00W - Connector on Cable (see conn list) 901 - 1 ft. /0.3m Cable 902 - 2 ft./0.6m Cable 903 - 3 ft./0.9m Cable 905 - 5 ft./1.5m Cable 910 - 10 ft./3m Cable 915 - 15 ft./4.5m Cable 920 - 20 ft./6m Cable 925 - 25 ft./7.5m Cable 930 - 30 ft./9m Cable 933 - 33 ft./10m Cable

Nidec Industrial Solutions
243 Tuxedo Avenue - Cleveland, Ohio 44131
encoderhelpdesk@nidec-industrial.com
+1 216-642-1230 - www.avtronencoders.com

Features and specifications are subject to change without notice. EU-SMART™, SMARTSafe™, SMARTTach™, THIN-LINE™, WIDE-GAP™, SAFETach™, and BULLSEYE32™ are trademarks of Nidec Industrial Solution. All other trademarks and registered trademarks are the property of their respective owners. Nidec Industrial Solutions' standard warranty applies. All dimensions approximate.