Avtron HS45 Encoders

Heavy Mill Duty Magnetic Hollow Shaft Encoder, 5/8"-1 1/8" [16-30mm]

Magnetic Durability in a Compact Encoder

- No fragile optics, no glass disks
- All electronics fully potted/encapsulated
- Cast aluminum heavy duty housing
- 3-5X heavier duty bearings
- Insulated from motor shaft currents
- Immune to magnetic and electrical interference from motors and brakes
- 3 Year No-Hassle Warranty
- Mechanical Overspeed Switch Option

HS45

Avtron HS45 EU-SMART Encoders are magnetic, hollow shaft, heavy duty encoders (incremental rotary quadrature encoders) for any mounting application including NEMA motors (incl. GE, Marathon, US Motors) and European-style motors such as ABB and Siemens. Also available: AV45 solid shaft encoder to fit European B-flanges (85mm), and foot mount applications and severe duty AV685 encoders.

The HS45 offers clamp-style and (rear) center-bolt mounting options. Clamp-style fits shafts from 5/8" to 1 1/8" [16mm-30mm]; center-bolt mounting is available for 16mm (straight) and 17mm (cone/taper shaft). Clamp-style mounting utilizes a convenient field-changable sizing sleeve and provides shaft current isolation. Center-bolt styles feature insulated ceramic ball bearings to prevent shaft current damage.

The HS45 is designed for use in rough environments with constant exposure to temperature extremes, water, oil, and dirt. Its high-power output circuits with universal 5-24V power are fully protected against surges and wiring errors. The onboard diagnostics warn of any signal quality issues before these problems cause downtime on your machine.

OUTLINE DRAWING

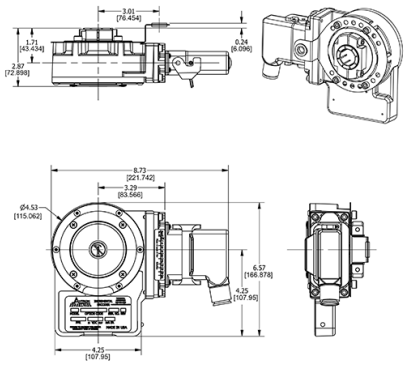

MORE HS45 ADVANTAGES

- Direct replacement for Hubner HOG8, 9, 10, Leine & Linde 861, 862, 865, and many others
- Fits US motors with shafts from 5/8" to 1 1/8"
- Fits European motors with 16mm straight and 17mm taper shaft center-bolt systems
- Full protection against wiring errors and short circuits, surges and reverse voltage
- High-power outputs for long cable runs
- Diagnostic LED & alarm output contact option
- Dual isolated output option (mix and match PPRs as needed)

MORE HS45 SPECIFICATIONS

Operating Power: Volts: 5-24VDC; 100mA, no load
Output Format: A Quad B with marker (A,/A, B,/B, Z,/Z)
Second Isolated Output: Optional
Frequency Range: 0 to 165 kHz
Maximum Instantaneous Current Output: 3000mA*
PPR: 8-5000
Speed: 5000 RPM Max. std., for higher speeds, consult factory
Enclosure: IP65
Electronics: Fully Encapsulated, IP67*
Temperature: -40° to +100°C*
Vibration: 18Gs
Shock: 100Gs
Chemical: Polyurethane enamel paint protects against salt spray, mild acids, and bases.

*see manual for specification details

Check out our website for more detailed specifications, drawings, and installation instructions. www.avtronencoders.com

Nidec Industrial Solutions
243 Tuxedo Avenue - Cleveland, Ohio 44131
encoderhelpdesk@nidec-industrial.com
+1 216-642-1230 - www.avtronencoders.com

Features and specifications are subject to change without notice. EU-SMART™, SMARTSafe™, SMARTTach™, THIN-LINE™, WIDE-GAP™, SAFETach™, and BULLSEYE32™ are trademarks of Nidec Industrial Solution. All other trademarks and registered trademarks are the property of their respective owners. Nidec Industrial Solutions' standard warranty applies. All dimensions approximate.

SELECTION GUIDE

MODEL	HOLLOW SHAFT BORE SIZE	LEFT OUTPUT PPR	RIGHT OUTPUT PPR	LINE DRIVER	CONNECTOR OPTIONS	ANTI-ROTATION TETHER	CHANNELS	MODIFICATIONS
HS45	C - 5/8 in. bore, insulated shaft bushing, universal end or thru shaft mountable D - 3/4 in. bore, insulated shaft bushing, universal end or thru shaft mountable E - 7/8 in. bore, insulated shaft bushing, universal end or thru shaft mountable F - 1 in. bore, insulated shaft bushing, universal end or thru shaft mountable G - 1 1/8 in. bore, insulated shaft bushing, universal end or thru shaft mountable N - 1.188 in. bore, requires insulated bearings special option code 001 , universal end or thru shaft mountable K - 1 3/8 in bore, requires insulated bearing option 001, universal end or thru shaft mountable S - 16mm bore, insulated shaft bushing, universal end or thru shaft mountable T - 18mm bore, insulated shaft bushing, universal end or thru shaft mountable V - 19mm bore, insulated shaft bushing, universal end or thru shaft mountable W - 20mm bore, insulated shaft bushing, universal end or thru shaft mountable Y - 25mm bore, insulated shaft bushing, universal end or thru shaft mountable 3 - 30mm bore, insulated shaft bushing, universal end or thru shaft mountable L - 16mm center-bolt style mount: european end of shaft (Ceramic Bearings) M - 17mm tapered shaft, center-bolt mount, european end of shaft Ceramic Bearings) P - 20mm center-bolt style with keyway: Hubner FGH4K/FGH40K end of shaft fit J - 30mm, center-bolt style mount, XT45 replacement, end of shaft U - 5/8 in. thru 1 in. shaft bushings (Universal USA), End and Thru shaft mountable with 1.188 in. OD Z - 16mm thru 30mm shaft bushings (Universal Metric), End and Thru shaft mountable with 1.188 in. OD	XX - No Left Output BD - 10 PPR BF - 25 PPR BT - 36 PPR BC - 50 PPR AF - 60 PPR AK - 80 PPR AG - 100 PPR AH - 120 PPR AA - 128 PPR AM - 200 PPR AL - 240 PPR AN - 256 PPR AP - 300 PPR AE - 360 PPR AC - 400 PPR AB - 480 PPR AQ - 500 PPR AR - 512 PPR AS - 600 PPR AU - 720 PPR AV - 900 PPR AJ - 960 PPR AW - 1000 PPR AY - 1024 PPR AZ - 1200 PPR BK - 1365 PPR CX - 1500 PPR A3 - 2000 PPR A4 - 2048 PPR BA - 2400 PPR A5 - 2500 PPR CG - 3000 PPR AT - 3072 PPR A7 - 3600 PPR BB - 4000 PPR AD - 4096 PPR A8 - 4800 PPR A9 - 5000 PPR A2 - 8192 PPR BL - 16384 PPR BM - 25000 PPR A0 - Special PPR	XX - No Right Output BD - 10 PPR BF - 25 PPR BT - 36 PPR BC - 50 PPR AF - 60 PPR AK - 80 PPR AG - 100 PPR AH - 120 PPR AA - 128 PPR AM - 200 PPR AL - 240 PPR AN - 256 PPR AP - 300 PPR AE - 360 PPR AC - 400 PPR AB - 480 PPR AQ - 500 PPR AR - 512 PPR AS - 600 PPR AU - 720 PPR AV - 900 PPR AJ - 960 PPR AW - 1000 PPR AY - 1024 PPR AZ - 1200 PPR BK - 1365 PPR CX - 1500 PPR A3 - 2000 PPR A4 - 2048 PPR BA - 2400 PPR A5 - 2500 PPR CG - 3000 PPR AT - 3072 PPR A7 - 3600 PPR BB - 4000 PPR AD - 4096 PPR A8 - 4800 PPR A9 - 5000 PPR A2 - 8192 PPR BL - 16384 PPR BM - 25000 PPR A0 - Special PPR	6 - 5-24v in, 5-24v out (7272) 8 - 5-24V in/5-24v Out Hi-Power (HX) w/wiring protection 9 - 5-28v In, 5v Out (7272 Line Driver)	A - 10 Pin MS style w/o Plug, Avtron/BEI Pin Out B - 10 Pin MS style w/o Plug, Dynapar HS35 Pin Out C - 10 Pin MS style w/Plug, Avtron/BEI Pin Out D - 10 Pin MS style w/Plug, Danaher HS35 Pin Out E - 6 Pin MS style w/ Plug F - 6 Pin MS style w/ Plug, Dynapar HS35 Pin Out H - Terminal Box for USA 1/2 in. conduit, LED & Remote Alarm Diagnostics L - Terminal Box w/Cord Grip, EU Labels, LED & Remote Alarm Diagnostics J - 7 Pin MS style w/ Plug K - 7 Pin MS style w/ Plug, Dynapar HS35 Pin Out M - 7 Pin MS style w/o Plug on 4 ft cable w/HD cable sheath, Avtron/BEI HS35 Pin Out P - 10 pin Industrial (mini-EPIC Style) w/ Plug, Remote Alarm Diagnostics G - 10 pin mini-EPIC Style w/Plug, Northstar Pin Out Q - 18 in. Cable w/10 Pin Industrial (mini-EPIC Style) w/ Plug, Adapter Block & Remote Alarm Diagnostics R - 10 pin Mini-MS Twist-Lock (Baldor/Bayonet Style) w/plug, Avtron/BEI Pin Out S - 10 pin Mini-MS Twist-Lock (Baldor/Bayonet Style) on 36 in. cable w/plug, Avtron/BEI Pin Out T - M12-8 Pin Turck Pin Out U - M12-8 Pin USA Pin Out W - Cable (36 in. or special length) with Remote Alarm Diagnostics Y - 12 in. Cable w/10 Pin MS In-Line Connector, w/Plug Z - Base Mounted mini-Epic Style on 18 in. cable w/Plug with Remote Alarm Diagnostics 1 - Base Mounted Large-Epic Style on 18 in. cable w/Plug with Remote Alarm Diagnostics 2 - M23-12 Pin w/o plug, Leine & Linde, and Hubner Pin Out 3 - M23-12 Pin w/o plug, Inverted Hubner Pin Out 4 - 10 pin MS style w/Plug, Large Encoder Pin Out (Avtron M3/M4, Mxxx & Northstar Models) with Remote Alarm Diagnostics 5 - Conduit Box Assy. Hubner "C" Compatible Pinout 0 - Special connector, see special option code for details	D - Fan Cooled Motor T-Bolt Tether Kit, w/1/4 in., 5/16 in., and 3/8 in. Hardware E - 4.5 in. / Reliance 6.75" NEMA 56 C-Face Tether F - 8.5 in. NEMA C-Face Tether G - Threaded Rod Torque Arm Kit, Adjustable 70-500mm (4.25 in.-19 in.) w/M6 x 30mm Screw H - Fan Cooled Motor T-Bolt and 8.5 in. NEMA FC-Face Tethers (Options D&F) M - Fan Cooled Motor T-Bolt and 4.5 in./Reliance 6.75 in. NEMA 56 C-Face Tethers (Options D&E) P - Threaded Rod Torque Arm Kit, Fixed 70mm Length, w/M6 x 30mm Screw T - Threaded Rod Torque Arm Kit, Adjustable 70-500mm and Fan Cooled Motor T-Bolt Tether Kit, w/M6 x 35mm T-Bolt Y - Dual Stacked HS45 - Outboard Encoder Short Torque Arm - Tethers Outboard Encoder to back of HS45 Inboard Encoder U - Universal Tether/Torque Arm Kit (includes all standard tethers) 2 - Hubner ADAPTER FLANGE 68 MM TAPERED PILOT X - No Tether	A - All Channels (A, A/, B, B/, Z, Z/) B - Channels (A, A/, B, B/, No Marker) E - Channels (A, B, Z, No Complements) F - Channels (A, B, No Complements, No Marker)	000 - No Special Options 001 - Ceramic (Insulating) Bearings for 1.188 in. and 1.375 in. native bore sizes only. 004 - Super Magnetic Shielding 012 - Black Paint & 5 ft. [1.5m] cable built in to sensor(s) 020 - Add Finger Guard (B36039) 021 - Add Finger Guard (B36039) & Super Magnetic Shielding 022 - Rail Option Package w/stub shaft, coupling, spc'l conn, hose 026 - Super Sealing, 300 RPM Max, End of Shaft Mount Only 035 - Cabinet mounted Electronic Overspeed + Super Magnetic Shielding 036 - Add Cabinet mounted Electronic Overspeed 500 - Add 100C temperature range to shaft bores 5/8 in.-1 in. and 16mm-25mm (Not required for 16mm & 17mm center bolt and 1.188 in. and 30mm clamp styles) 503 - Add 100C temperature range to shaft bores 5/8 in.-1 in. and 16mm-25mm; also add special cable length 1m/3ft 504 - Add 100C temperature range to shaft bores 5/8 in.-1 in. and 16mm-25mm; also add super magnetic shielding 901 - 0.3m/1 ft. Special Cable Length 902 - 0.6m/2 ft. Special Cable Length 903 - 0.9m/3 ft. Special Cable Length 904 - 1.2m/4 ft. Special Cable Length 905 - 1.5m/5 ft. Special Cable Length 908 - 2.4m/8 ft. Special Cable Length 910 - 3m/10 ft. Special Cable Length 915 - 4.5m/15 ft. Special Cable Length 920 - 6m/20 ft. Special Cable Length 925 - 7.5m/25 ft. Special Cable Length 930 - 9m/30 ft. Special Cable Length 933 - 10m/33 ft. Special Cable Length

AVTRON™ ENCODERS A Nidec BRAND

Nidec Industrial Solutions
243 Tuxedo Avenue - Cleveland, Ohio 44131
encoderhelpdesk@nidec-industrial.com
+1 216-642-1230 - www.avtronencoders.com

Features and specifications are subject to change without notice. EU-SMART™, SMARTSafe™, SMARTTach™, THIN-LINE™, WIDE-GAP™, SAFETach™, and BULLSEYE32™ are trademarks of Nidec Industrial Solution. All other trademarks and registered trademarks are the property of their respective owners. Nidec Industrial Solutions' standard warranty applies. All dimensions approximate.