Avtron XR4F SMARTSafe™ Encoders

Hazardous Duty Shafted Encoder, 85mm B5 & B10-Flange or Foot Mount

Magnetic Durability in a Compact Encoder

- 10mm, 11mm & 18mm Shaft Sizes
- EURO B5 & B10 Flange Mount
- Up to 5000 PPR
- -40°C to +80°C Operation
- 3 Year No-Hassle Warranty
- Magnetic Sensors: No Glass Disks
- Self-Diagnostic LED & Remote Alarm
- ATEX Rated: Zones 1 & 2, 21 & 22
- IECEx Rated: Zones 1 & 2, 21 & 22
- cULus Class I Division 1 Groups A,B,C,D Listed
- cULus Class I Zone 0 Group IIC
- cULus Class I Division 2 Groups A,B,C,D Listed

XR4F

XR4F solid shaft encoders are a unique industry first. By combining Avtron durable magnetic encoder technology with SMARTSafe™ systems, Avtron has created a truly durable solid shaft encoder which can be used in hazardous environments and applications. It is ATEX, IECEx & cULus certified. SMARTSafe encoders can be used in gas and ATEX dust hazard environments. Also available: hollow shaft models (XR45, XR685), NEMA style shafted model (XR485), and no-bearing modular encoders (XR56, XR85, XR115, XR125, XR850).

For applications requiring ATEX or IECEx Zone 2 or 22 or UL Class I, Division 2 use the XR4F directly with no barrier, isolator, special connector or cable gland required.

For applications requiring ATEX or IECEx Zone 1 or 21, we offer protection using the XRB3 isolator in your control cabinet to permit intrinsic safety wiring rather than explosion proof conduit or glands. For applications requiring NEC 500 UL Class I, Division 1, or NEC 505 (c)UL Class I, Zone 0, use the XRB3 isolator remotely and intrinsic safety wiring.

Unlike the competition, the Avtron SMARTSafe encoder systems are protected against short circuits, power-to-output wiring, and output-to-ground faults. Wiring errors won't harm this system.

Instead of relying on a tiny optical encoder with weak bearings, install the most rugged encoders available. Vibration, shock, liquids, dust and dirt won't harm SMARTSafe encoders! Mud pumps, paint booths, hazardous duty IEC motors...XR4F can keep them all working 24/7/365.

Select the Avtron XR4F SMARTSafe encoder to eliminate encoder problems in your hazardous duty application!

OUTLINE DRAWING

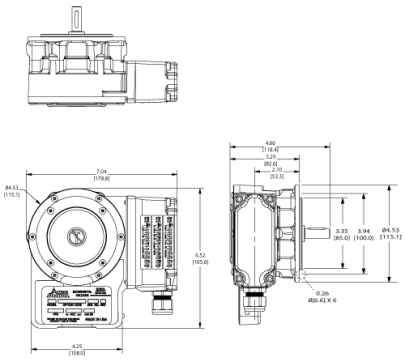

MORE XR4F ADVANTAGES

- Directly replaces Hubner OG9, FOG9, POG9, POG 9G, POG90, POG10 G, POG 11, POG 11G models
- Bearings up to 4X larger than competitors models
- Foot, B5 or B10 Euro Flange Mount
- Directly replaces Johannes Hubner FG4, FG40 models
- Fully Potted Electronics Withstand Liquids & Dusts
- Protected Against Surges and Wiring Problems

MORE XR4F SPECIFICATIONS

Operating Power: (add load and cable drive current as req'd)
Division 1, Zone 1 (XRB3): 12-24VDC In/Out, 150 mA
Division 2, Zone 2: 5-24VDC In/Out, 150mA
Output Format: A Quad B with marker (A,/A, B,/B, Z,/Z)
Frequency Range: 0 to 165 kHz
Maximum Cable Length:
Division 1, Zone 1: Encoder 500' Isolator 1000'
Division 2, Zone 2 (5 to 12 VDC in): 500'
Division 2, Zone 2 (15 to 24 VDC in): 250'
Temperature: -40°C to 80°C (storage -40°C to 100°C)
Environmental: IP54 (see manual for details)
Vibration: 5-2000Hz, 20G, 100G Shock
Weight: 10-12lbs [4.5-5.5kg]
Certifications:
ATEX/IECEx Zone 1 & 21 Group IIC
cULus Class I Div 1 and Zone 0 Group A,B,C,D*
ATEX/IECEx Zone 2 & 22 Group IIC
cULus Class I Div. 2 Groups A,B,C,D
***See installation drawings for Warnings and Limitations.**

Check out our website for more detailed specifications, drawings, and installation instructions. www.avtronencoders.com

Nidec Industrial Solutions
243 Tuxedo Avenue - Cleveland, Ohio 44131
encoderhelpdesk@nidec-industrial.com
+1 216-642-1230 - www.avtronencoders.com

Features and specifications are subject to change without notice. EU-SMART™, SMARTSafe™, SMARTTach™, THIN-LINE™, WIDE-GAP™, SAFETach™, and BULLSEYE32™ are trademarks of Nidec Industrial Solution. All other trademarks and registered trademarks are the property of their respective owners. Nidec Industrial Solutions' standard warranty applies. All dimensions approximate.

SELECTION GUIDE

MODEL	SHAFT SIZE	LEFT OUTPUT PPR	RIGHT OUTPUT PPR	LINE DRIVER	CONNECTOR OPTIONS	FOOT MOUNTING	CHANNELS	MODIFICATIONS
XR4F	H - 11mm diameter Standard Shaft N - 10mm diameter Shaft T - 18mm diameter Shaft S - 16mm diameter Shaft	XX - No Left Output AF - 60 PPR AK - 80 PPR AG - 100 PPR AH - 120 PPR AA - 128 PPR AM - 200 PPR AL - 240 PPR AN - 256 PPR AP - 300 PPR AE - 360 PPR AC - 400 PPR AB - 480 PPR AQ - 500 PPR AR - 512 PPR AS - 600 PPR AV - 900 PPR AJ - 960 PPR AW - 1000 PPR AY - 1024 PPR AZ - 1200 PPR A4 - 2048 PPR CX - 1500 PPR A5 - 2500 PPR AT - 3072 PPR A7 - 3600 PPR AD - 4096 PPR A8 - 4800 PPR A9 - 5000 PPR	XX - No Right Output BC - 50 PPR AF - 60 PPR AK - 80 PPR AG - 100 PPR AH - 120 PPR AA - 128 PPR AM - 200 PPR AL - 240 PPR AN - 256 PPR AP - 300 PPR AE - 360 PPR AC - 400 PPR AB - 480 PPR AQ - 500 PPR AR - 512 PPR AS - 600 PPR AV - 900 PPR AJ - 960 PPR AW - 1000 PPR AY - 1024 PPR AZ - 1200 PPR A4 - 2048 PPR CX - 1500 PPR A5 - 2500 PPR AT - 3072 PPR A7 - 3600 PPR AD - 4096 PPR A8 - 4800 PPR A9 - 5000 PPR	7 - Level 2 Protection, (ATEX/IECEx Zone 2 & 22) 5-24v in, 5-24V out F - Level 1 Protection, (UL Class I, Div 1, UL/cUL Class I, Zone 0 Listed) 5-7v in, 5V out (NOTE Requires XRB3 Isolator) G - Level 2 Protection, (UL Class I, Div 2 Listed) 5-24v in, 5-24V out H - Level 1 Protection (ATEX/IECEx Zone 1 & 21), 5-7v in, 5v out (NOTE requires XRB3 Isolator) R - US CLASS I, DIV 2, ZONE 2, RECOGNIZED 5-24v in, 5-24v out	A - 10 pin MS style w/o Plug, Avtron/BEI Pinout, LED Diagnostics B - 10 pin MS style w/o Plug, (Dynapar Phasing) C - 10 pin MS style w/ Plug, Avtron/BEI Pinout, LED Diagnostics D - 10 pin MS style w/ Plug, (Dynapar Phasing) 4 - 10 pin MS style w/o Plug, M3/M4 Pinout E - 6 pin MS style w/o Plug, BEI/Avtron HS35 pinout, LED Diagnostics F - 6 pin MS style w/o Plug (Dynapar Phasing) G - 10 pin Industrial (EPIC Style) w/ Plug, w/LED Alarm H - Terminal box w/ USA 1/2" conduit entry (UL/ATEX/IECEx) J - 7 pin MS style w/o Plug, Avtron/BEI HS35 Pinout, LED Diagnostics K - 7 pin MS style w/o Plug, (Dynapar Phasing) L - Terminal box w/ USA 1/2" + cord grip, (cUL/UL/ATEX/IECEx) M - Terminal box w/ USA 3/4" conduit entry (cUL/UL/ATEX/IECEx) N - Terminal box w/ USA 1" conduit entry (cUL/UL/ATEX/IECEx) 8 - Terminal box w/ 25mm conduit entry (cUL/UL/ATEX/IECEx) P - 10 pin Industrial (Small EPIC Style) w/ Plug, LED & Remote Alarm Diagnostics (Level 2 Only) R - Baldor Mini MS style Twist-Lock w/plug, LED & Remote Alarm Diagnostics T - M12 w/o plug, Global Pinout, LED Diagnostics U - M12 w/o plug, USA Pinout, LED Diagnostics W - Cable (18" or special length), LED Diagnostics & remote alarm contact 2 - M23 w/o plug, Leine and Linde & Hubner pinout, LED Diagnostics 3 - M23 w/o plug, Inverted Hubner Signals, LED Diagnostics	X - Standard B10 Flange Mount, No Foot Mount 1 - Foot Mount, Toshiba TS2113N Bolt Pattern (may require 18mm shaft) 2 - Foot Mount, Baumer Hubner POGxx/OGxx Bolt Pattern 3 - Foot Mount, Johannes Hubner FG4 Bolt Pattern 4 - Foot Mount, Toshiba Type MSP Bolt Pattern	A - Standard, All Channels A,A\,B,B\,Z,Z\ B - 2 Channels A,A\,B,B\ D - Single Channel A,A\ (N/A w/ Reverse Phasing) E - 2 Channels A,B,Z F - 2 Channels A,B	000 - No Special Options 001 - Ceramic (Isolated) Bearings 004 - Super Magnetic Shielding 018 - Include XRB3 Remote Level 1 Isolator for Cabinet Mount 901 - 0.3m/1' Special Cable Length, No Connector 902 - 0.6m/2' Special Cable Length, No Connector 903 - 0.9m/3' Special Cable Length, No Connector 905 - 1.5m/5' Special Cable Length, No Connector 910 - 3m/10' Special Cable Length, No Connector 915 - 4.5m/15' Special Cable Length, No Connector 920 - 6m/20' Special Cable Length, No Connector 925 - 7.5m/25' Special Cable Length, No Connector 930 - 9m/30' Special Cable Length, No Connector 933 - 10m/33' Special Cable Length, No Connector

Nidec Industrial Solutions
243 Tuxedo Avenue - Cleveland, Ohio 44131
encoderhelpdesk@nidec-industrial.com
+1 216-642-1230 - www.avtronencoders.com

Features and specifications are subject to change without notice. EU-SMART™, SMARTSafe™, SMARTTach™, THIN-LINE™, WIDE-GAP™, SAFETach™, and BULLSEYE32™ are trademarks of Nidec Industrial Solution. All other trademarks and registered trademarks are the property of their respective owners. Nidec Industrial Solutions' standard warranty applies. All dimensions approximate.