Avtron AV30 Absolute Encoders

Severe Mill Duty Shafted Absolute Encoder, Singleturn or Multiturn

Magnetic Durability in a Compact Encoder

- Fits Industry Standard 2.5", 58mm and 85mm Flanges
- Shaft Sizes 1/4"-3/8" [10mm-18mm]
- Up to 32 Bit Resolution
- Moisture-Proof, Shock Resistant Magnetic Sensor
- Singleturn or Multiturn
- IP65 Rating
- Bearings 20X Larger Than Standard Encoder!
- No Batteries or Gears!
- -40° to 85°C Operation
- Directly Replaces Standard Models
- 3 Year No-Hassle Warranty

AV30

AV30 shafted magnetic absolute rotary encoders offer a completely new level of durability, never seen before in absolute encoders. Yet the AV30 encoder will fit existing flanges and mounts, enabling easy upgrades from low durability encoders. Also available: hollow shaft model (HS40) and optical models (AV6A, HS6A) for ultra-precision applications.

The AV30 features massive bearings with over 10X the load rating of the competition. Industry-leading seal systems stay sealed to keep contaminants out, through temperature cycling and liquid sprays. Moreover, the magnetic sensor can see through oil, dust and dirt that disable ordinary optical absolute encoders.

By utilizing Wiegand wire energy harvesting technology combined with magnetic sensors, Avtron has created an absolute encoder design which requires no batteries, long-term capacitors, glass disks, or gears!

The AV30 features a broad range of industry standard communication protocols: from analog outputs to Profibus and SSI, you will find the communication protocol you need.

Stop suffering costly downtime due to absolute encoder failures--upgrade to AV30 today!

OUTLINE DRAWING

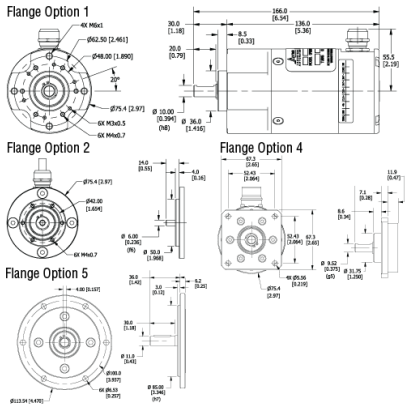

MORE AV30 ADVANTAGES

- More than 6X the axial and side load capability of the competition
- No internal gearbox to wear out
- Zero-Position set button for SSI output
- Optional factory-programmable cam limits

MORE AV30 SPECIFICATIONS

Operating Power:
SSI: 5-30VDC; 30mA @ 24VDC, 125mA @ 5VDC
Analog V Out: 12-30VDC; 15mA @ 24V
Analog I Out: 15-30VDC; 40mA @ 24V
Output Format: Analog, Profibus, SSI
Accuracy: +/-0.35° (+/-21 arc-min)
Temperature: -30°C to +85°C
Environmental: IP65
Shaft Load: 290N axial, 225N radial*
Vibration: 5-2000Hz, 30G*
Shock: 300G, 6mSec*
Weight: 3lb [1350g]
Certifications: CE

*With certain configurations

Check out our website for more detailed specifications, drawings, and installation instructions. www.avtronencoders.com

Nidec Industrial Solutions
243 Tuxedo Avenue - Cleveland, Ohio 44131
encoderhelpdesk@nidec-industrial.com
+1 216-642-1230 - www.avtronencoders.com

Features and specifications are subject to change without notice. EU-SMART™, SMARTSafe™, SMARTTach™, THIN-LINE™, WIDE-GAP™, SAFETach™, and BULLSEYE32™ are trademarks of Nidec Industrial Solution. All other trademarks and registered trademarks are the property of their respective owners. Nidec Industrial Solutions' standard warranty applies. All dimensions approximate.

SELECTION GUIDE

MODEL	COMMUNICATION BUS	FLANGE	SHAFT SIZE	TURNS/BIT/MT	PPR / BITS PER TURN/ST	CONNECTOR	CONNECTOR EXIT	SIGNAL CODING	ADDITIONAL MOUNTING	SPECIAL OPTIONS
AV30	A - Analog Output (field-scalable) P - Profibus DP S - SSI Communication	1 - 58mm Flange ("clamp style"), 36mm Pilot, 3X M3, 3X M4 @ 48mm BC 2 - 58mm Flange ("EU servo"), 50mm Pilot, 6X M4 @ 42mm BC 3 - 3.00 in. Servo flange with 2.50 in. Pilot 4 - 2.65 in. Square flange with 1.25 in. Pilot 5 - 85mm B10 Flange, 100mm b.c. 6 - NEMA 56 4.50" Pilot 0 - Custom Flange, Consult Factory or see Special Options	B - 0.375 in. Solid Shaft w/flat C - 10mm Solid Shaft w/flat H - 11mm Solid Shaft w/key T - 6mm Solid Shaft, no flat V - 0.250 in. Solid Shaft 0 - Custom Shaft Size, Consult Factory	X - 0 Turns/0 bits-Single Turn A - 16 Turns/4 bits-(Field-Scalable for Analog 0.03 to 65536 turns) 2 - 4096 Turns/12 bits 3 - 8192 Turns/13 bits 4 - 16384 Turns/14 bits 5 - 32768 Turns/15 bits 6 - 65536 Turns/16 bits	2 - 4096 Counts per Revolution/12 bits 3 - 8192 Counts per Revolution/13 bits 6 - 65536 Counts per Revolution/16 bits	C - 3xM12 (4/5/5 or 4/4/4) pin w/o Plugs E - M12/8 pin w/o Plug F - M23/12 pin w/o Plug S - 1x Cable Entry (rear terminal box w/grommet) K - 3x Cable Entry (rear terminal box w/grommets) W - 1m Cable	A - Side/Radial exit	1 - Binary Bit Coding 2 - Gray Coding (SSI Only) 3 - 0-5V (Analog Only) 4 - 0-10V (Analog Only) 5 - 4-20mA (Analog Only) 6 - 0-20mA (Analog Only) 7 - 0.5-4.5V (Analog Only) 8 - 0.5-9.5V (Analog Only)	X - No Additional Face Bolt Circle 0 - Custom Face Bolt Circle, Consult Factory	000 - No Special Features 092 - Special 4.00 in. Round flange with 2.50 in. Pilot, 10'/3m Cable 901 - 1'/0.3m Cable 902 - 2'/0.6m Cable 903 - 3'/0.9m Cable 905 - 5'/1.5m Cable 910 - 10'/3m Cable 915 - 15'/4.5m Cable 920 - 20'/6m Cable 925 - 25'/7.5m Cable 930 - 30'/9m Cable 933 - 33'/10m Cable 970 - 70'/21.3m Cable 9XX - Custom Cable Length, Consult Factory M00 - Special Manglam Electrical Code M20 - Special Manglam Electrical Code with Custom 20ft cable

AVTRON™ ENCODERS A Nidec BRAND

Nidec Industrial Solutions
243 Tuxedo Avenue - Cleveland, Ohio 44131
encoderhelpdesk@nidec-industrial.com
+1 216-642-1230 - www.avtronencoders.com

Features and specifications are subject to change without notice. EU-SMART™, SMARTSafe™, SMARTTach™, THIN-LINE™, WIDE-GAP™, SAFETach™, and BULLSEYE32™ are trademarks of Nidec Industrial Solution. All other trademarks and registered trademarks are the property of their respective owners. Nidec Industrial Solutions' standard warranty applies. All dimensions approximate.